ALPHA CONTROLS®

ALPHA CONTROLS LTD

ANGLE SEAT & SHUTTLE VALVES

www.alphacontrols.co.uk

ANGLE SEAT AND
SHUTTLE VALVES

Alpha Controls Ltd is committed to excellent customer service and has established partnerships with many major companies throughout the UK. We have 2 sites in the UK – Wigan in Lancashire and Slough. We are a highly dedicated and experienced team of technicians ensure an excellent customer service across a wide range of industries and applications. It's a service based on sound, objective advice from one of the leading independent companies in this field – Alpha Controls.

Automation

Offering one of the largest ranges of solenoid valves from one single source in the UK. Sizes from M5 to 8 in a variety of materials such as brass, stainless steel, PTFE and others. Applications as varied as domestic appliances, special purpose machines, medical and scientific instrumentation as well as general purpose engineering. In addition to solenoid valves Alpha Controls Ltd can offer a whole range of pneumatic controls, piloted valves, cylinders, grippers, fittings, air line filters from 1/2 to DN300 plus FRL's. Alpha Controls Ltd are also able to supply customised assemblies and complete control cabinets to meet customers specific requirements.

Process Control

Alpha Controls Ltd's process control product range offers 90° pneumatic rack & pinion actuators from 10 to 21,430NM. Both Rack and Pinion and Scotch Yoke designs are available. Body materials in epoxy coated aluminium, stainless steel, steel and polymide. Options include 180° rotation and high temperature actuators for applications up to 265°C. A full range of accessories are also available including: NAMUR solenoid valves, proportional control positioners, de-clutch gear boxes, switch boxes, electric actuators etc.

Alpha Controls Ltd can also supply their actuators mounted on a wide range of ball and butterfly valve to suit the customers' requirements. Also in the range are air piloted angle seat steam valves, manual ball and butterfly valves etc.

Scientific Applications

Within the Alpha Controls Ltd product range are many items specifically designed for medical or scientific applications. Many of these are manufactured so that all wetted parts are in PTFE, such as solenoid valves, regulators, check valves, fittings, solenoid metering pumps and level switches etc. Other materials such as stainless steel, delrin, PVC etc. are also available. Whichever of the above areas are of interest, Alpha Controls Ltd can offer experienced external and internal technical sales staff who can assist you in finalising your requirements and hopefully from this one source, Alpha Controls Ltd.

PNEUMATIC
SHUTTLE VALVE

ALPHA CONTROLS LTD
Tel: +44 (0)1942 525833 | **E-mail:** technicalsales@alphacontrols.co.uk

APPLICATIONS

- Beer & Drinks Filling Machinery
- Textile Printing & Dyeing
- Gas Industry
- Pharmacy & Medical Equipment
- Rubber Machinery
- Chemical Industry
- Disinfection
- Frothing Equipment
- Water/sewage Disposal

FUNCTION PRINCIPLE

This valve opens and closes through piston motion forced by compressed air. As fluid pressure acts onto valve seat, the piston experiences little resistance and thereby enables the valve to quickly open/close. The latest design improvement results in more effiuent fluid dynamics and less pressure loss.

ADVANTAGES

- Compact and aesthetic design. Stainless steel body ensures superb durability.
- Easy to use with many possible mounting positions. Valve operates efficiently with minimum pressure loss.
- Excellent sealing, work well with relative vacuum

TECHNICAL SPECIFICATION

Fluid Pressure	Max 1.6MPa (232psi)
Control Pressure	0.3-0.SMPa (43.5-116psi)
Control Medium	Neutral gas, Air
Body Material	CF8M/CF8
Seal Material	EPDM / FKM (VITON)
Applicable Medium	FKM-Suitable for most fluid, except for steam. EPDM-Suitable for steam and hot water, unsuitable for oils, greases, fuels etc.
Medium Temperature	-20°C- + 150°C(FKM), -20°C- + 130°C(EPDM)
Ambient Temperature	-20°C- +80°C
Control Type	Normally closed, Normally open, Double acting with spring, Double acting
Connection Type	Threaded(BSP,NPT,BSPT)

OPEN / CLOSE

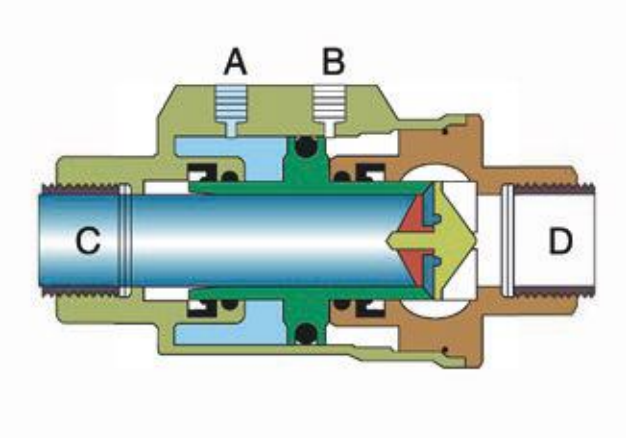

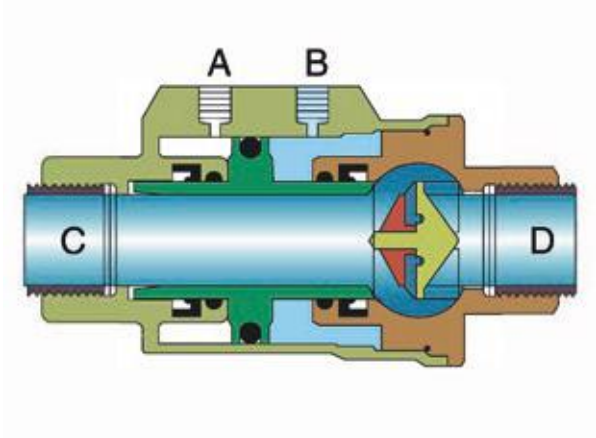

Closing

When hole "A" is supplied with air (hole "B" must be discharging), the piston moves towards and eventually presses onto the seat, thereby closing the valve.

For a single acting N.C. shuttle valve, a spring is installed in 'A" pressing the piston against seat seal and allowing the valve to remain closed in its idle state.

Opening

When hole 'B" is supplied with air (hole "A" must be discharging), the piston move towards 'C" and away from seat seal, thereby opening the valve.

For a single-acting N.O. shuttle valve, a spring is installed in "B", forcing the piston away from seat seal and allowing the valve to remain open in its idle state.

ORDER INSTRUCTION

SF 20X X XX X X

- SF — Shuttle valve
- 20X — Series NO.
- X — Valve operating
  - 0 Normally open
  - 1 Normally closed
  - 2 Double acting, with spring
  - 3 Double acting
- XX — Size DN8、10、15、20、25、32、40、50、65、80、100
- X — Connection
  - G — BSP Thread
  - T — BSPT Thread
  - N — NPT Thread
  - F — Flange
- X — Accessory
  - J — Limit Switch
  - D — Solenoid

Example: SF 200 1 25 G
Means: Shuttle valve, Series 200, Normally closed, DN25, BSP thread.

ALPHA CONTROLS LTD
Tel: +44 (0)1942 525833 | **E-mail:** technicalsales@alphacontrols.co.uk

MAIN DIMENSION FOR 200 SERIES

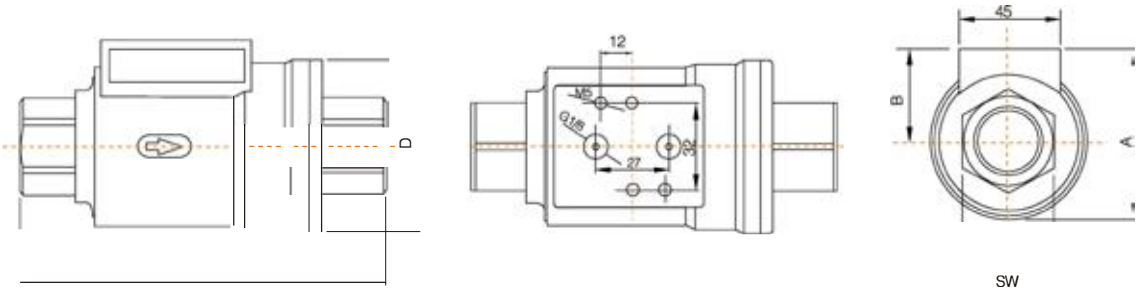

Size	DN10	DN15	DN20	DN25	DN32	DN40	DN50
Thread End	3/8"	1/2"	3/4"	1"	1 1/4"	1 1/2"	2"
A (mm)	56	61	72	78	94	104	116
D (mm)	46	52	64	69	86	96	108
SW (mm)	22	26.5	32	41	50	56	70
B (mm)	33	35	40	43	51	56	62
L (mm)	98	112	135	143	165	180	207
Weight (Kg)	0.76	0.94	1.43	1.85	2.98	3.66	5.64

MAIN DIMENSION FOR 201 SERIES

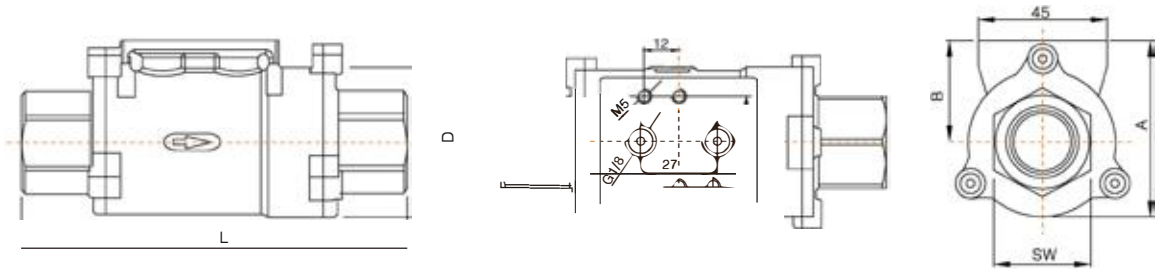

Size	DN8	DN10	DN15	DN20	DN25	DN32	DN40	DN50
Thread End	1/4"	3/8"	1/2"	3/4"	1"	1 1/4"	1 1/2"	2"
A (mm)	49.5	49.5	53.3	63.5	70	85.5	95	109
D (mm)	37	37	42.5	52	60	75	84	97
SW (mm)	22	22	26	32	40	49	53	68
B (mm)	31	31	32	37.5	40	48	53	60
L (mm)	98	98	112	135	143	165	180	207
Weight (Kg)	0.54	0.54	0.67	1.05	1.45	2.32	2.82	4.38

FLANGE END PNEUMATIC
SHUTTLE VALVE

ALPHA CONTROLS LTD
Tel: +44 (0)1942 525833 | **E-mail:** technicalsales@alphacontrols.co.uk

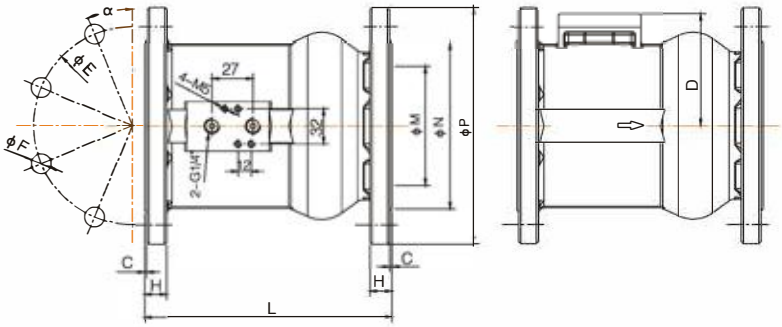

Flange specification: JB/T82.1–1994; DIN2543–2000

TECHNICAL SPECIFICATION

Fluid Pressure	(Above seat): Max 1.6MPa (232psi), (Below seat): Max 1,2MPa (174psi)
Control Pressure	0.3-0.5MPa (43.5-72.5psi)
Control Medium	Neutral gas, Air
Body Material	CF8
Seal Material	EPDM/(FKM can be customized)
Applicable Medium	EPDM-Suitable for steam and hot water, unsuitable for oils, greases, fuels etc, FKM-Suitable for most fluid, except for steam.
Medium Temperature	-20°C- + 130°C
Ambient Temperature	-20°C- +B0°C
Control Type	Double acting
Connection Type	Flanged

MAIN DIMENSION

Size	D	L	ϕE	ϕF	H	C	ϕM	ϕN	ϕP	α	Kv(m³/h)	weight(Kg)
DN65	85	192	145	4– ϕ 18	20	2	66	120	180	45°	139.3	10.0
DN80	92	212	160	8– ϕ 18	22	2	75	135	195	22.5°	202.6	13.32
DN100	102	227	180	8– ϕ 18	22	2	94	155	215	22.5°	288	16.30

PNEUMATIC
ANGLE SEAT VALVE

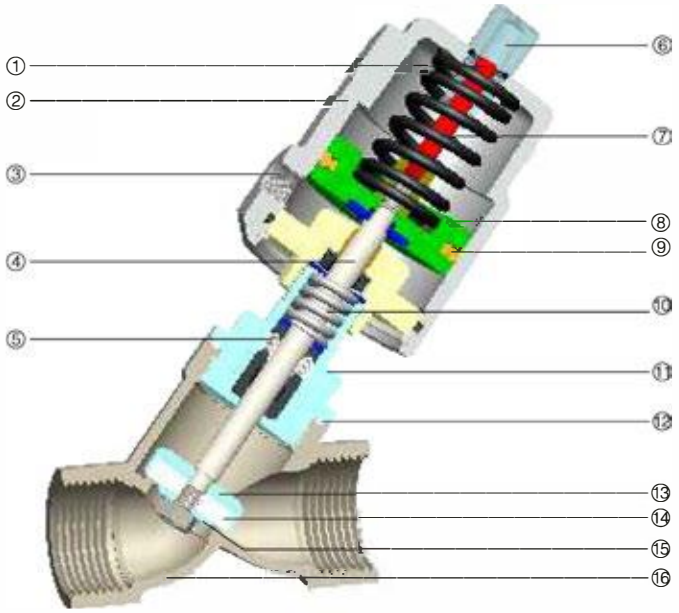

1 Indication Rod (nylon)
2 Actuator (CFS)
3 Pilot Port (1/8″)
4 Stem (AISI316/304)
5 Stem Seal (PTFE)
6 Cap (PC)
7 Spring (Steel 65Mn)
8 Piston (Alu.alloy)
9 Piston Seal (Viton)
10 Seal Spring (AISI304)
11 Connecting Piece (CF8M/CF8)
12 Body Seal (PTFE)
13 Valve core (CF8M/CF8)
14 Seat Seal (PTFE)
15 Gasket (AISI316/304)
16 Body (CF8M/CF8)

FUNCTION PRINCIPLE

Valve stays closed(open) by spring force in its normal state. When piston is actuated by compressed air, valve becomes opened(closed).

For double acting type, valve is opened and closed by compressed air.

ADVANTAGES

- Large flux, low resistance, no water-hammer
- Y-type shape with enlarged flowing section raises flux by 30% and smoothens the flow.
- Superb service life.
- The stem adjusts and lubricates itself automatically, minimizing needs for maintaince.
- The cylinder can rotate 360° unconstrained, and uses stainless steel material, which enables superior performance.

TECHNICAL SPECIFICATION

Fluid Pressure	Max 1.6MPa(232psi)
Control Pressure	0.3- 0.SMPa (43.5-116psi)
Control Medium	Neutral gas, Air
Body Material	CF8M/CF8
Seal Material	PTFE
Actuator Material	CFS
Actuator Size	40mm, 50mm, 63mm, 90mm, 125mm
Applicable Fluid	Water, Alcohol, Oil, Fuel, Steam, Neutral gas or liquid, Organic solvent, Acid and lye
Fluid Viscosity	Max 600mm′/s
Fluid Temperature	-10°C-+180°C, +25°C-+220°C
Ambient Temperature	-10°C -+80°C
Control Type	Normally closed, Normally open, Double acting
Connection	Threaded(BSP, BSPT, NPT), Welded, Flanged, Tri-clamp

APPLICATIONS

- Beer & Drinks Bottling Machinery
- Textile Printing & Dyeing
- Gas Industry
- Pharmacy & Medical Equipment
- Chemical Industry
- High-temperature disinfection
- Frothing Equipment
- Water/Sewage treatment

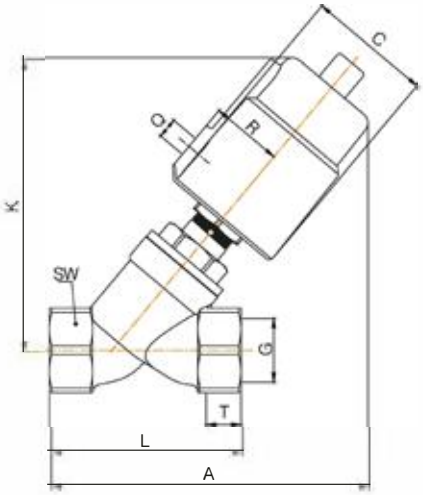

Threaded Connection

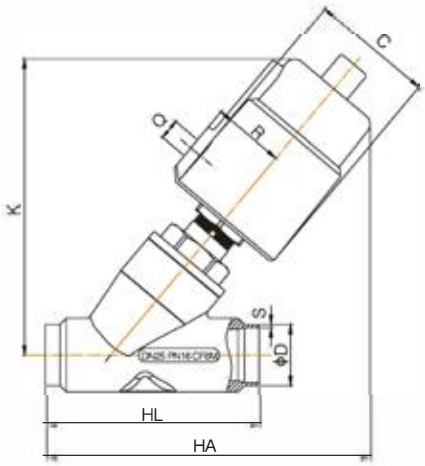

Welded Connection

MAIN DIMENSION

Size	Actuator (mm)	Q	C	R	K	Threaded connection					Welded connection					
						G	T	A	L	SW	HA	HL	DIN11850–2		DIN11850–3	
													D	S	D	S
DN10	40	1/8"	50.5	27	112	3/8"	12	124	68	27	–	–	–	–	–	–
	50	1/8"	60	33	125			135			–	–	–	–	–	–
DN15	40	1/8"	50.5	27	112	1/2"	15	124	68	27	118	70	19	1.5	20	2
	50	1/8"	60	33	125			135			128					
DN20	50	1/8"	60	33	132	3/4"	16	140	75	32	135	82	23	1.5	24	2
DN25	50	1/8"	60	33	136	1"	17	150	90	40	150	100	29	1.5	30	2
	63	1/8"	75	41	162			172			175					
	90AL	1/8"	112	57	210			215			216					
	90	1/8"	106	55	211			216			218					
DN32	63	1/8"	75	41	174	1 1/4"	21	190	116	50	186	125	35	1.5	36	2
	90AL	1/8"	112	57	220			230			230					
	90	1/8"	106	55	223			235			232					
DN40	63	1/8"	75	41	175	1 1/2"	21	190	116	56	190	130	41	1.5	42	2
	90AL	1/8"	112	57	220			230			232					
	90	1/8"	106	55	223			235			235					
DN50	63	1/8"	75	41	183	2"	22	205	138	69	206	155	53	1.5	54	2
	90AL	1/8"	112	57	232			245			247					
	90	1/8"	106	55	232			250			250					
	125AL	1/4"	170	85	300			305			307					
DN65	90AL	1/8"	112	57	262	2 1/2"	26	282	178	85	–	–	–	–	–	–
	90	1/8"	106	55	265			285			–	–	–	–	–	–
	125AL	1/4"	170	85	315			327			–	–	–	–	–	–
DN65 Square opening	90AL	1/8"	112	57	280			270			315	270	70	2	–	–
	90	1/8"	106	55	280			275			320				–	–
	125AL	1/4"	170	85	330			320			360				–	–
DN80 Square opening	125AL	1/4"	170	85	355	3"	27	340	210	100	360	284	85	2	–	–
DN80	125AL	1/4"	170	85	327			380			–	–	–	–	–	–

FLANGE END
ANGLE SEAT VALVE

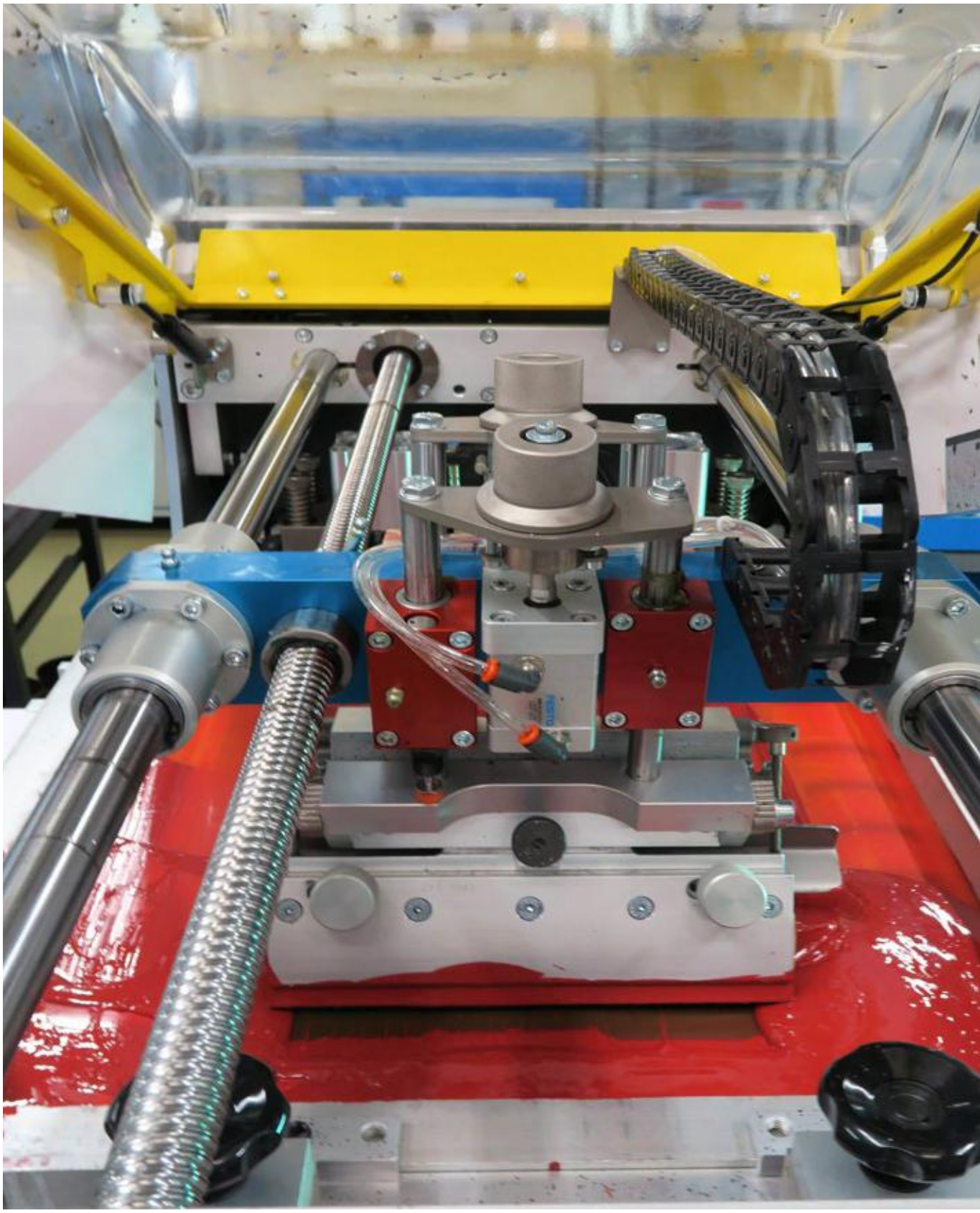

ALPHA CONTROLS LTD
Tel: +44 (0)1942 525833 | **E-mail:** technicalsales@alphacontrols.co.uk

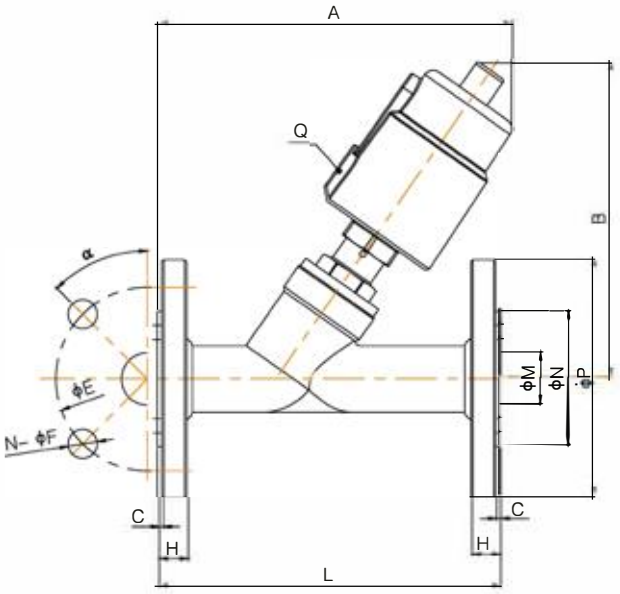

Flange specification:
DIN2576(JB/T82.1); customization available, ISO/DIN/JIS is also available

MAIN DIMENSION

Size	Actuator (mm)	Q	A	B	L	C	H	ϕE	N–ϕF	ϕM	ϕN	ϕP	α
DN15	40	G1/8	135	125	130	2	14	65	4–14	16	45	95	45°
	50		145	140									
DN20	50	G1/8	165	140	150	2	14	75	4–14	19	56	105	45°
DN25	50	G1/8	170	145	160	2	14	85	4–14	26	65	115	45°
	63		190	175									
DN32	63	G1/8	190	188	180	2	16	100	4–18	31	78	140	45°
	90		230	235									
	90AL		225	234									
DN40	63	G1/8	206	190	200	3	16	110	4–18	38	84	150	45°
	90		250	240									
	90AL		244	235									
DN50	63	G1/8	235	195	230	3	16	125	4–18	49	100	165	45°
	90		277	245									
	90AL		275	245									
	125AL	G1/4	330	310									
DN65 Square opening	90	G1/8	330	280	290	3	18	145	4–18	66	120	185	45°
	90AL		325	280									
	125AL	G1/4	375	330									
DN80 Square opening	125AL	G1/4	380	355	310	3	20	160	8–18	78	135	200	22.5°
DN100	125AL	G1/4	420	395	350	3	20	180	8–18	96	155	215	22.5°

TRI-CLAMP ENDS
ANGLE SEAT VALVE

ALPHA CONTROLS LTD
Tel: +44 (0)1942 525833 | **E-mail:** technicalsales@alphacontrols.co.uk

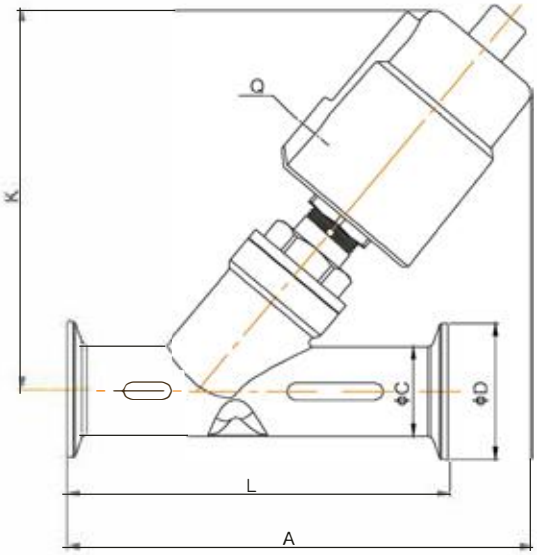

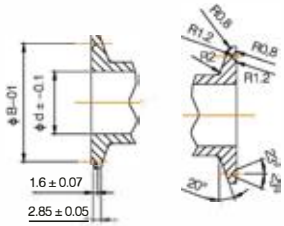

Clamp Specification:
ISO2852-1993, customization available.

MAIN DIMENSION

Size	Actuator (mm)	Q	A	K	L	C	B	ϕd	ϕD
DN15	40	1/8"	130	115	80	19	27.5	15	34
	50	1/8"	140	126					
DN20	50	1/8"	158	148	130	25	43.5	19	50.5
	63	1/8"	175	163					
DN25	50	1/8"	165	140	130	32	43.5	27	50.5
	63	1/8"	188	166					
DN32	63	1/8"	200	174	146	37	43.5	31	50.5
	90	1/8"	245	223					
	90AL	1/8"	242	222					
DN40	63	1/8"	210	175	160	40	56.5	33	64
	90	1/8"	255	223					
	90AL	1/8"	254	222					
DN50	63	1/8"	221	185	175	53	56.5	45	64
	90	1/8"	265	235					
	90AL	1/8"	265	232					
	125AL	1/4"	325	296					
DN65 Square opening	90	1/8"	325	280	278	75	83.5	66	91
	90AL	1/8"	320	280					
	125AL	1/4"	360	330					
DN80 Square opening	125AL	1/4"	360	352	290	89	97	78	106

PRESSURE
DATA SHEET

Single Acting, Normally Closed (NC) – Enter Above Seat

Suitable for condensable media, such as air, steam, and low pressure liquid media.

Size	Thread end	Orifice (mm)	Kv (m^3/h)	Actuator (mm)	△P(MPa)	Control pressure (MPa)
DN10	G3/8"	13	3.8	40	0–1.6	0.3–0.45
				50	0–1.6	0.3–0.35
DN15	G1/2"	13	4.7	40	0–1.6	0.3–0.45
				50	0–1.6	0.3–0.35
DN20	G3/4"	18	9.5	50	0–1.6	0.3–0.4
DN25	G1"	24	18.1	50	0–1.6	0.3–0.45
				63	0–1.6	0.3–0.35
				90	0–1.6	0.2–0.25
DN32	G1–1/4"	31	23.1	63	0–1.6	0.3–0.55
				90	0–1.6	0.2–0.35
DN40	G1–1/2"	35	32.9	63	0–1.6	0.3–0.65
				90	0–1.6	0.2–0.4
DN50	G2"	45	52.8	63	0–0.9	0.3–0.7
				90	0–1.6	0.2–0.45
				125	0–1.6	0.2–0.3
DN65	G2–1/2"	61	82.6	90	0–1.0	0.2–0.6
				125	0–1.6	0.2–0.4
DN80	G3"	80	127	125	0–1.2	0.2–0.7

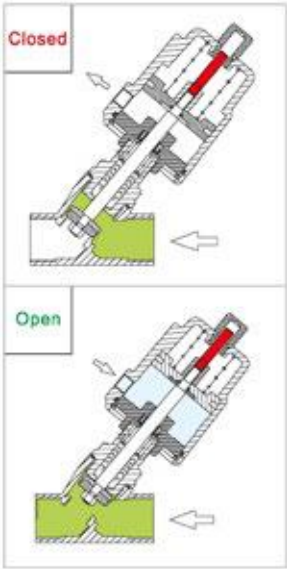

Single Acting, Normally Closed (NC) – Enter Below Seat (NO Water–hammer)

Flow enters below seat, avoid water hammer

Size	Thread end	Orifice (mm)	Kv (m^3/h)	Actuator (mm)	△P(MPa)	Control pressure (MPa)
DN10	G3/8"	13	3.8	40	0–1.3	0.4
				50	0–1.4	0.45
DN15	G1/2"	13	4.7	40	0–1.3	0.4
				50	0–1.4	0.45
DN20	G3/4"	18	9.5	50	0–1.4	0.45
DN25	G1"	24	18.1	50	0–0.8	0.45
				63	0–1.3	0.5
				90	0–1.4	0.35
DN32	G1–1/4"	31	23.1	63	0–0.6	0.5
				90	0–1.6	0.6
DN40	G1–1/2"	35	32.9	63	0–0.5	0.5
				90	0–1.6	0.6
DN50	G2"	45	52.8	63	0–0.3	0.5
				90	0–1.0	0.6
				125	0–1.6	0.55
DN65	G2–1/2"	61	82.6	90	0–0.6	0.6
				125	0–0.9	0.55
DN80	G3"	80	127	125	0–0.5	0.55
DN100	G4"	90	143	125	0–0.25	0.55

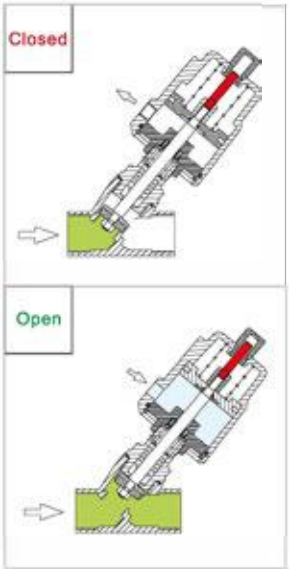

www.esgvalve.com

ALPHA CONTROLS LTD
Tel: +44 (0)1942 525833 | **E-mail:** technicalsales@alphacontrols.co.uk

PRESSURE
DATA SHEET

Double Acting, Normally Closed (NC) – Enter Above Seat

Suitable for higher △P; valve can close automatically in case of emergency.

Size	Thread end	Orifice (mm)	Kv (m^3/h)	Actuator (mm)	△P(MPa)	Control pressure (MPa)
DN10	G3/8"	13	3.8	40	0–1.6	0.3–0.45
				50	0–1.6	0.3–0.35
DN15	G1/2"	13	4.7	40	0–1.6	0.3–0.45
				50	0–1.6	0.3–0.35
DN20	G3/4"	18	9.5	50	0–1.6	0.3–0.4
DN25	G1"	24	18.1	50	0–1.6	0.3–0.45
				63	0–1.6	0.3–0.35
				90	0–1.6	0.2–0.25
DN32	G1–1/4"	31	23.1	63	0–1.6	0.3–0.55
				90	0–1.6	0.2–0.35
DN40	G1–1/2"	35	32.9	63	0–1.6	0.3–0.65
				90	0–1.6	0.2–0.4
DN50	G2"	45	52.8	63	0–0.9	0.3–0.7
				90	0–1.6	0.2–0.45
				125	0–1.6	0.2–0.3
DN65	G2–1/2"	61	82.6	90	0–1.0	0.2–0.6
				125	0–1.6	0.2–0.4
DN80	G3"	80	127	125	0–1.2	0.2–0.7

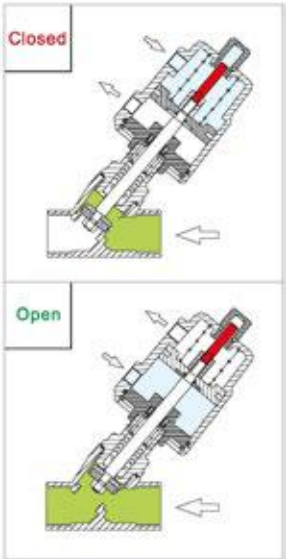

Double Acting, Normally Closed (NC) – Enter Below Seat(No Water–hammer)

Flow enters below seat, avoid water hammer, suitable for higher △P.

Size	Thread end	Orifice (mm)	Kv (m^3/h)	Actuator (mm)	△P(MPa)	Control pressure (MPa)
DN10	G3/8"	13	3.8	40	0–1.6	≥0.3
				50	0–1.6	≥0.3
DN15	G1/2"	13	4.7	40	0–1.6	≥0.3
				50	0–1.6	≥0.3
DN20	G3/4"	18	9.5	50	0–1.6	≥0.3
DN25	G1"	24	18.1	50	0–1.3	0.3–0.6
				63	0–1.6	0.3–0.4
				90	0–1.6	0.2–0.3
DN32	G1–1/4"	31	23.1	63	0–1.6	0.3–0.6
				90	0–1.6	0.2–0.4
DN40	G1–1/2"	35	32.9	63	0–1.6	0.3–0.7
				90	0–1.6	0.2–0.5
DN50	G2"	45	52.8	63	0–0.8	0.3–0.75
				90	0–1.6	0.2–0.6
				125	0–1.6	0.2–0.4
DN65	G2–1/2"	61	82.6	90	0–1.1	0.2–0.7
				125	0–1.6	0.2–0.55
DN80	G3"	80	127	125	0–1.6	0.2–0.65
DN100	G4"	90	143	125	0–1.2	0.4–0.5

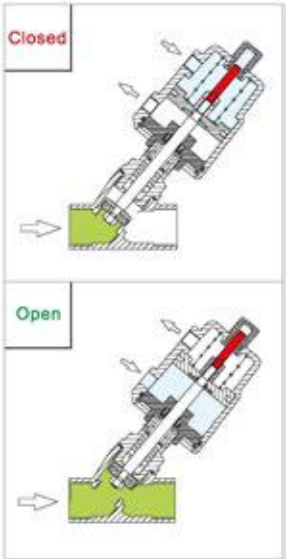

PRESSURE
DATA SHEET

Normally Open(NO)–Enter Above Seat

Suitable for long time open–valve application. With the silencer taken off, valve can be changed to double acting–NO type.

Size	Thread end	Orifice(mm)	Kv(m^3/h)	Actuator(mm)	△P(MPa)	Control pressure (MPa)
DN10	G3/8"	13	3.8	40	0–1.6	≥0.3
				50	0–1.6	≥0.3
DN15	G1/2"	13	4.7	40	0–1.6	≥0.3
				50	0–1.6	≥0.3
DN20	G3/4"	18	9.5	50	0–1.2	≥0.3
DN25	G1"	24	18.1	50	0–0.3	≥0.3
				63	0–1.6	≥0.45
DN32	G1–1/4"	31	23.1	63	0–1.4	≥0.45
DN40	G1–1/2"	35	32.9	63	0–1.4	≥0.45
DN50	G2"	45	52.8	63	0–0.6	≥0.45

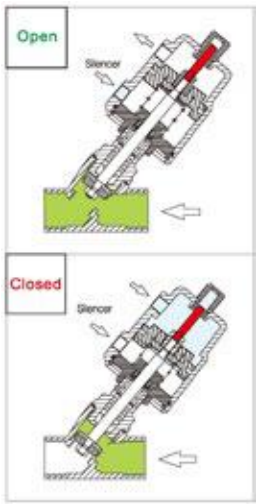

Normally Open(NO)–Enter Below Seat (NO water–hammer)

Suitable for long time open–valve application, avoid water hammer
With the silencer taken off, valve can be changed to double acting–NO type

Size	Thread end	Orifice (mm)	Kv (m^3/h)	Actuator (mm)	△P(MPa)	Control pressure (MPa)
DN10	G3/8"	13	3.8	40	0–1.6	0.2–0.5
				50	0–1.6	0.2–0.4
DN15	G1/2"	13	4.7	40	0–1.6	0.2–0.5
				50	0–1.6	0.2–0.4
DN20	G3/4"	18	9.5	50	0–1.6	0.2–0.6
DN25	G1"	24	18.1	50	0–1.3	0.2–0.6
				63	0–1.6	0.25–0.5
DN32	G1–1/4"	31	23.1	63	0–1.3	0.25–0.6
DN40	G1–1/2"	35	32.9	63	0–0.7	0.25–0.6
				90	0–1.6	0.3–0.35
DN50	G2"	45	52.8	63	0–0.5	0.25–0.6
				90	0–1.2	0.25–0.6
DN65	G2–1/2"	61	82.6	90	0–0.75	0.25–0.5
				125	0–1.4	0.25–0.7
DN80	G3"	80	127	125	0–1.2	0.25–0.7

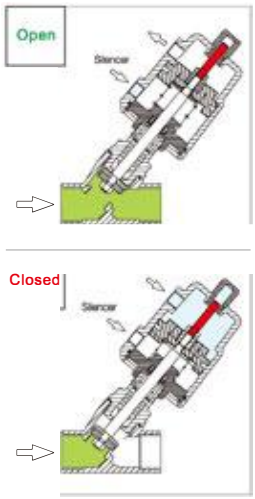

Order Instruction

JF 1XX XX X XX X X X

- JF — Angle seat valve
- 1XX — Series NO
- XX — 27/32/40/50/63/90/90AL/125AL Actuator size
- X — Valve operating
  - 0 Normally open
  - 1 Normally closed
  - 2 Double acting, with spring
  - 3 Double acting
- XX — Connection
  - G — BSP Thread
  - T — BSPT Thread
  - N — NPT Thread
  - H — Welded
  - F — Flange
  - K — Clamp
- X — Installation d ·ection
  - Y — Above seat
  - W — Below seat
- X — annex
  - D — Solenoid
  - S — Manual Override
  - J — Proximity Switch
  - H — Position Indicator

Size DN10、15、20、25、32、40 50 65、80、100

Example: JF 100 50 1 25 Y G
Means: Angle seat valve, Series 100, Actuator Φ50, Normally close single acting, DN25 enter above seat, BSP thread

www.esgvalve.com

ALPHA CONTROLS LTD
Tel: +44 (0)1942 525833 | E-mail: technicalsales@alphacontrols.co.uk

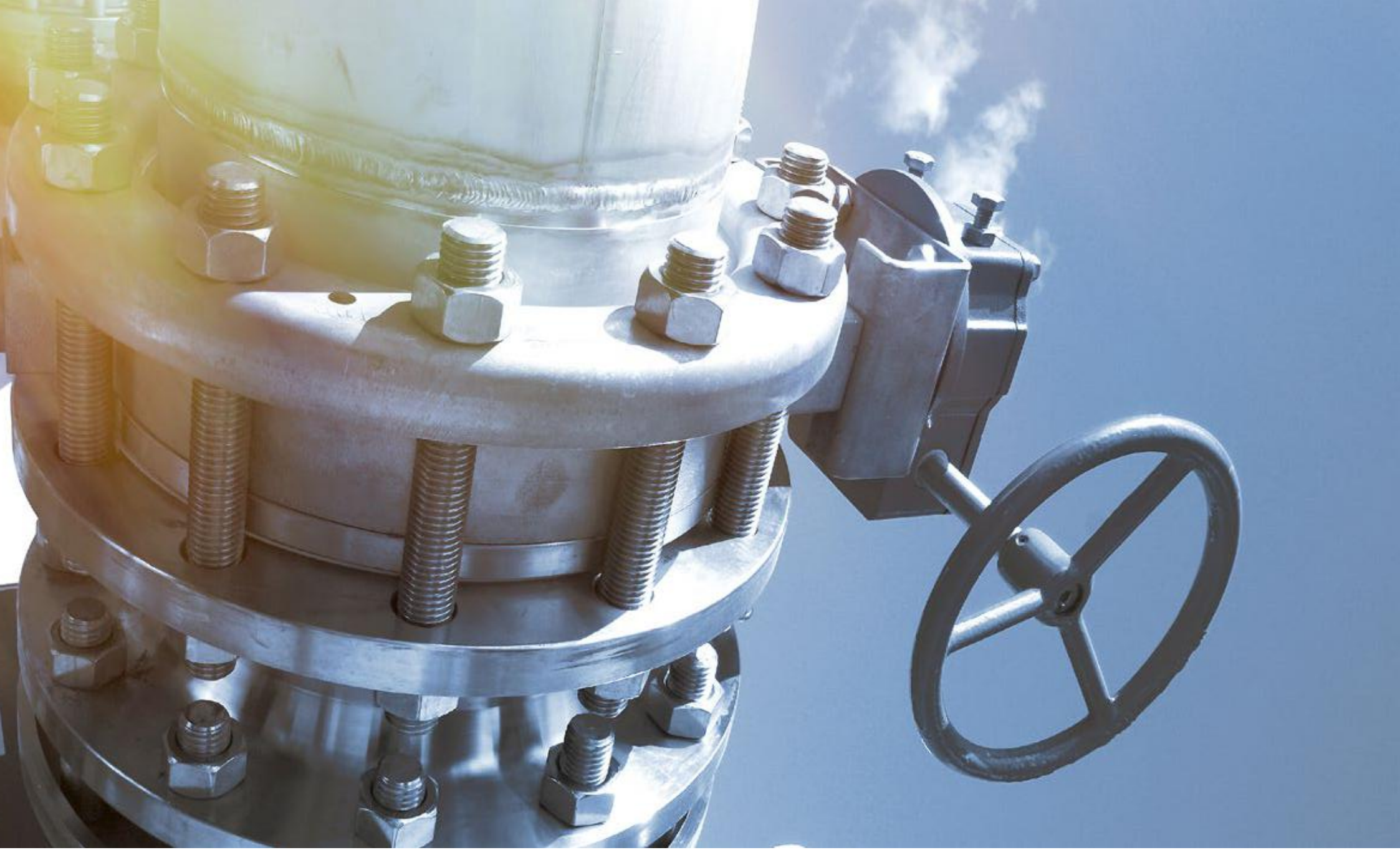


TAKING CONTROL THROUGH
CUSTOMISED SOLUTIONS
ALPHA CONTROLS
ALPHA CONTROLS LTD
Alpha House, Hindley Industrial Estate,
Swan Lane, Hindley Green. Wigan. WN2 4HR. UK
Telephone +44 (0)1942 525833
E-mail: technicalsales@alphacontrols.co.uk
www.alphacontrols.co.uk