ALPHA CONTROLS LTD

AlphaASD

SPRING-DIAPHRAGM ROTARY ACTUATORS

ALPHA ASD

SPRING-DIAPHRAGM ROTARY ACTUATORS

Designed and developed specifically for quarter turn valves. The ALPHA ASD Spring-Diaphragm Rotary Actuators were designed by using advanced spring-diaphragm technology that focuses on the crank-shaft and the connecting rod.
The ALPHA ASD Spring-Diaphragm Rotary Actuators are designed to be used with minimal pressure when necessary and can be operated by air, water, mineral-based hydraulic fluid. Our housing and cover are constructed with a ductile iron / carbon steel casing that is coated with a polyester powder coating. Our independent media room is equipped with a Buna-N diaphragm reinforced with polyamine fabric. These actuators are designed to work in temperatures as low as -40℃ (-40 °F) and as high as 200℃ (392 °F).

FEATURES

Universal Mounting Pads – Direct Mount

The ALPHA ASD series offer a combination of different mounting pads that allow you to directly replace existing Spring-Diaphragm Actuator or mount directly to new and existing quarter turn valves.

Namur Mount

The ALPHA ASD Spring-Diaphragm Rotary Actuators are designed to incorporate namur mounting for solenoids, limit switches and positioners.

Multiple Drive Bushing (Removable & Replaceable)

The ALPHA ASD Spring-Diaphragm Rotary Actuators feature removable drive bushings which allow you to mount our actuators to a number of different new or existing valve stem configurations in the field for existing valves or for new valve applications.

High Cycle Life Design & Low-Friction

The ALPHA ASD Spring-Diaphragm Rotary Actuators feature a rolling diaphragm design with a one piece diaphragm retainer and UMW Polyethylene bearing which helps to obtain longevity of the life cycle and exceptionally smooth actuation due to the low-friction that is produced during operation.

Reversible in Field Fail Open or Fail Closed Option

The ALPHA ASD Spring-Diaphragm Rotary Actuators can be quickly and easily changed to the fail open or fail closed positions in the field if necessary.

Torque Ranges

The ALPHA ASD Spring-Diaphragm Rotary Actuators output torques range from 15 to 1433 Nm(133 to 12680 in·lbs) depending on the actuator size and available supply pressure.

Supply Pressures

The ALPHA ASD Spring-Diaphragm Rotary Actuators can be operated with a number of different supply pressures ranging from 0.8 bar to 7 bar (12 PSI to 100 PSI).

Supply Media

The ALPHA ASD Spring-Diaphragm Rotary Actuators can be operated by air, water, mineral-based hydraulic fluid.

Travel Stops

The ALPHA ASD Spring-Diaphragm Rotary Actuators have double adjustable travel stops that allow our actuators to be adjusted to the fully open or the fully closed positions.

Mechanical Lockout Option

The ALPHA ASD Spring-Diaphragm Rotary Actuators can be locked in the spring failure mode.

Corrosion Resistant

The ALPHA ASD Spring-Diaphragm Rotary Actuators come complete with stainless steel external fasteners which provide durability and protection in corrosive application and atmospheres. Our actuators have a UV polyester resistant coating and a PTFE coating is also available as an option.

Maintenance Free Lubrication

The ALPHA ASD Spring-Diaphragm Rotary Actuators are lubricated at our factory during the time of production and not further lubrication is required during its life cycle.

Mechanical Lock-Spring Failure Mode

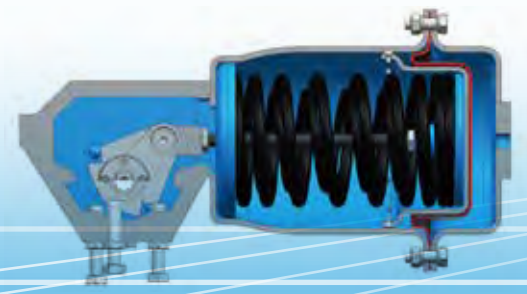

Independent Media Chamber

Drive Bushings

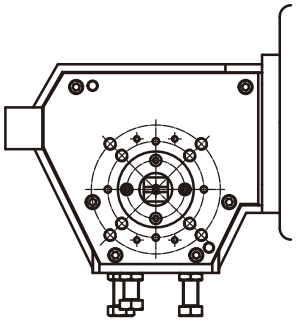

Limit Switch

Positioner

Accessory Connection

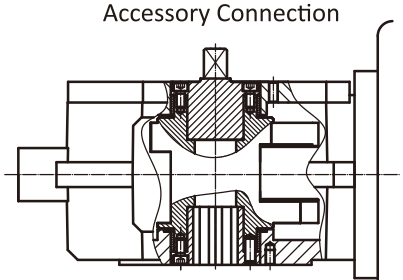

Valve Connection

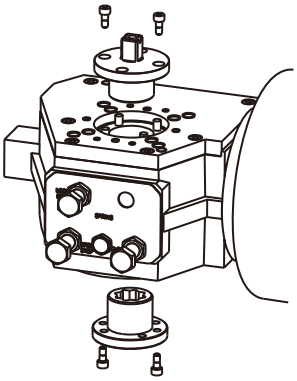

Removable Drives

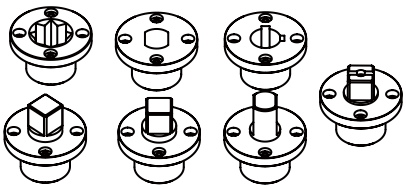

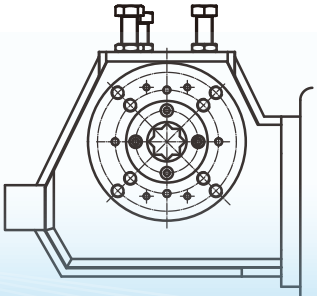

Female Double Square

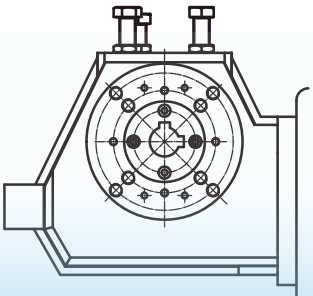

Female Keyed

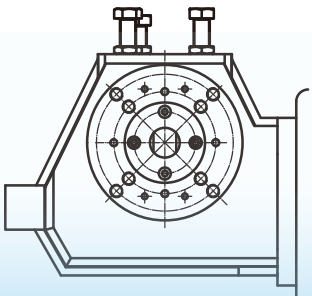

Female Double D .....

Exploded view

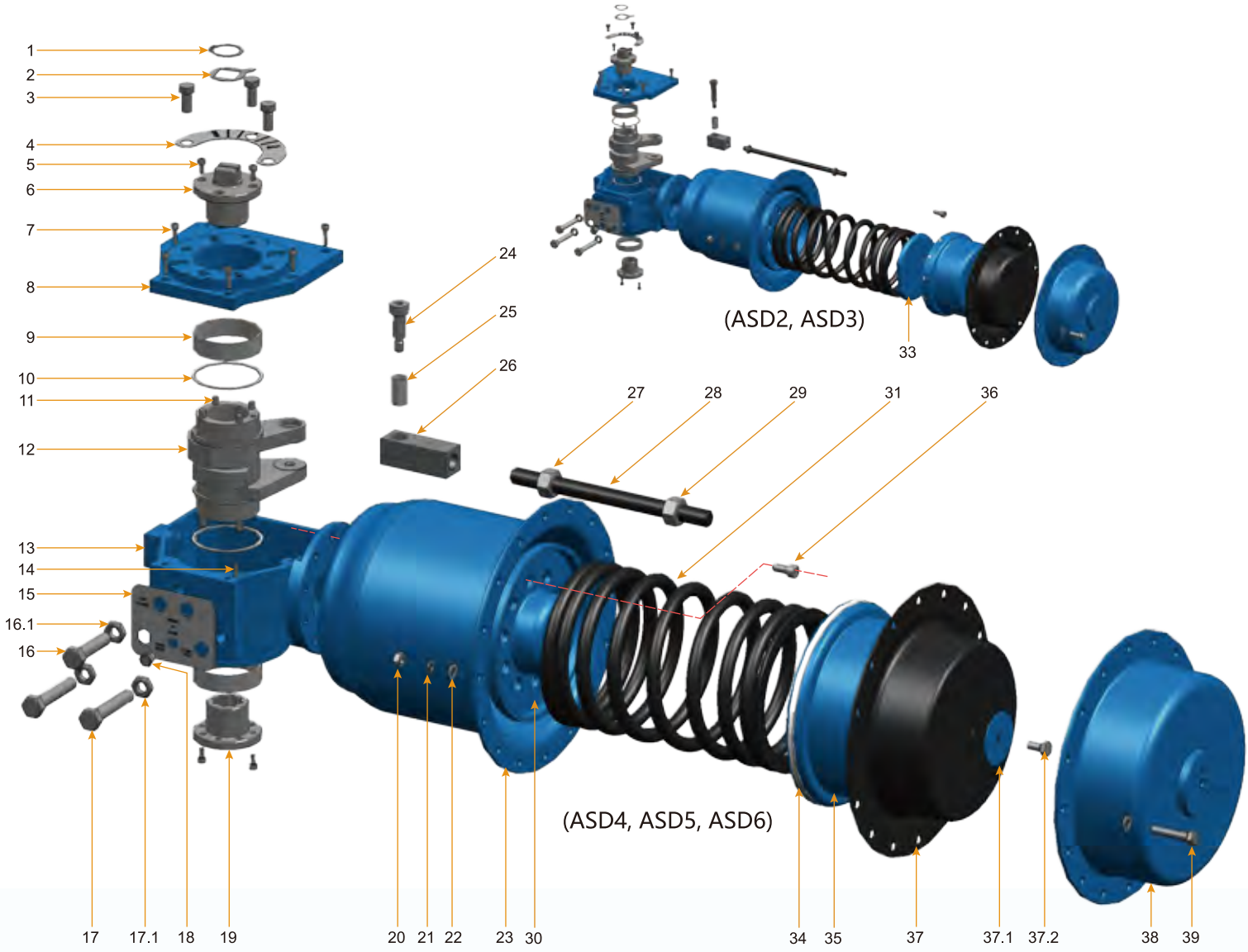

Bill of Material & Parts List

NO.	Part Name	Qty			Material	Surface treatment
		ASD2/3	ASD4/5	ASD6		
1	Spring Ring	1	1	1	Stainless Steel 304	
2	Indicator Pointer	1	1	1	Stainless Steel 304	
3	Hex Head Cap Screw	3	3	3	Stainless Steel 304	
4	Indicator Plate	1	1	1	Stainless Steel 304	
5	Socket Head Bush Screws	2	2	2	Stainless Steel 304	
6	Namur stem Namur	1	1	1	Carbon Steel	Nickel coated chemically
7	Socket Head Cap Screw	6	6	6	Stainless Steel 304	
8	Cover	1	1	1	Carbon Steel	polyester powder coated
9	Driver Arm Bearing	2	2	2	Stainless Steel w/ Acetal Lining	
10	Thrust Beating	2	2	2	Nylon	
11	Cylindrical pin	8	8	8	Carbon Steel	
12	Driver Arm	1	1	1	Ductile Iron	Nickel coated chemically
13	Driver Housing	1	1	1	Ductile Iron	Polyester powder coated
14	Cylindrical pin	2	2	2	Stainless Steel 304	
15	Nameplate	1	1	1	Stainless Steel 304	
16	Set Screw	1	1	1	Stainless Steel 304	
16.1	Hex Jam Nut	1	1	1	Stainless Steel 304	
17	Stop screws	2	2	2	Stainless Steel	
17.1	Hex Jam Nut	2	2	2	Stainless Steel 304	
18	Breather	1	1	1	Stainless Steel 316	
19	Drive bush	1	1	1	Carbon Steel	Nickel coated chemically
20	Lock Nut	12	12	24	Stainless Steel	
21	Spring-washer	12	12	24	Stainless Steel	
22	Gasket	24	24	48	Stainless Steel	
23	Spring Housing	1	1	2	Carbon Steel	Polyester powder coated
24	Shoulder Screw	1	1	2	Carbon Steel (12.8)	
25	Clevis Bearing	1	1	2	Stainless Steel w/ Acetal Lining	
26	Clevis	1	1	2	Carbon Steel	
27	Hex Jam Nut	1	1	2	Stainless Steel 304	
28	Acuator Rod	1	1	2	Carbon Steel	
29	Hex Jam Nut	1	1	2	Carbon Steel	
30	Spring Retainer	1	1	2	Carbon Steel	Polyester powder coated
31 / 32	Compression Springs	1	1	2	55Mn Spring Steel 55Mn	Polishing+capacitance coated
33	Spring Retainer Plate	1	–	–	Carbon Steel	Polyester powder coated
34	Diaphragm Retainer Bearing Pins	12	–	–	UHMW PE	
34	Diaphragm Retainer Bearing	–	1	2	POM	
35	Diaphragm Retainer	1	1	2	Carbon Steel	Polyester powder coated
36	Hex Head Cap Screw	4	4	8	Carbon Steel	
37	Diaphragm	1	1	2	NBR/Nylon66 Fabric Blend (-25°C~70°C)	
	Diaphragm (optional)	1	1	2	LNBR/Nylon66 Fabric Blend (-40°C~70°C)	
	Diaphragm (optional)	1	1	2	EPDM4/Polyester Fabric Blend (-29℃~170°C)	
	Diaphragm (optional)	1	1	2	Viton/NOMEX Fabric Blend (-15°C~200°C)	
37.1	Retaining washer	–	1	2	Stainless steel	
37.2	Hex head cap screw	–	1	2	Stainless steel	
38	Diaphragm Cover	1	1	2	Carbon Steel	Polyester powder coated
39	Hex Head Cap Screw	12	12	24	Stainless Steel 304	

How To Order By Part Number

ASD | 3 | C | MI | FS | MN | T1

Environment Temperature
- T1: -25℃ ~ 70℃ (-13°F ~ 158°F)
- T2: -40℃ ~ 70℃ (-40°F ~158°F)
- T3: -29℃ ~170℃ (-20.2°F~338°F)
- T4: -15℃ ~ 200℃ (5°F ~ 392°F)

Top Drive
- MN-Namur Stem
- FS-Female Star (Double Square)
- FK-Female Keys
- FD-Female Double D
- MQ-Male Square
- MT-Male Star
- MD-Male Double D

Bottom Drive
- FS-Female Star (Double Square)
- FK-Female Keys
- FD-Female Double D
- MQ-Male Square
- MT-Male Star
- MD-Male Double D
- MN-Namur Stem

Flange Mount Configuation
- MI-ISO 5211 Mount
- MJ-ISO + Jb Mount

Spring Configurations
- A - supply media pressure at 12 - 20 / 0.8-1.3 (psi / bar)
- B1- supply media pressure at 30 - 50 / 2.0-3.4 (psi / bar)
- B2- supply media pressure at 40 - 60 / 2.8-4.1 (psi / bar)
- C - supply media pressure at 50 - 70 / 3.4-4.8 (psi / bar)
- D - supply media pressure at 60 - 90 / 4.1-6.2 (psi / bar)

Actuator Size
- 2-Maximum spring return output torque 1549 / 175 (in·lbs / N·m)
- 3-Maximum spring return output torque 3151 / 356 (in·lbs / N·m)
- 4-Maximum spring return output torque 6310 / 713 (in·lbs / N·m)
- 5-Maximum spring return output torque 12647 / 1429 (in·lbs / N·m)
- 6-Maximum spring return output torque 22764 / 2573 (in·lbs / N·m)

ALPHA Spring-Diaphragm Rotary Actuator

ASD Actuator Output Torques (Nm)

Size	Air Strock at Pressure (Bar*)																						Spring Strock	
	0.8		1		1.3		2		2.8		3.4		4.1		4.8		5.5		6.2		7			
	0° BTO	90° ETO	0° BTO	90° ETO	0° BTO	90° ETO	0° BTO	90° ETO	0° BTO	90° ETO	0° BTO	90° ETO	0° BTO	90° ETO	0° BTO	90° ETO	0° BTO	90° ETO	0° BTO	90° ETO	0° BTO	90° ETO	0° ETC	90° BTC
ASD2A**	**25**	**6**	**35**	**16**	**50**	**31**	85	66	125	106	155	136	190	171	225	206	260	241	295	276	335	316	**15**	**34**
ASD2B1	–	–	–	–	–	–	**45**	**16**	**81**	**51**	**109**	**80**	144	115	178	149	211	182	248	219	287	258	**52**	**81**
ASD2B2	–	–	–	–	–	–	–	–	**66**	**15**	**94**	**44**	**129**	**79**	163	113	196	146	233	183	272	222	**67**	**117**
ASD2C	–	–	–	–	–	–	–	–	–	–	**91**	**34**	**126**	**69**	**160**	**104**	195	138	230	173	269	212	**77**	**134**
ASD2D	-	-	-	-	-	-	-	-	-	-	-	-	**103**	**28**	**137**	**62**	**172**	**97**	**207**	**132**	246	171	**100**	**175**
ASD3A**	**46**	**22**	**66**	**42**	**96**	**73**	167	143	247	224	308	284	378	355	449	425	519	496	590	566	671	647	**35**	**58**
ASD3B1	-	-	-	-	-	-	**90**	**26**	**164**	**100**	**222**	**157**	288	224	355	291	422	358	489	424	565	501	**103**	**168**
ASD3B2	-	-	-	-	-	-	-	-	**135**	**29**	**192**	**86**	**259**	**153**	326	220	393	287	459	354	536	430	**133**	**238**
ASD3C	-	-	-	-	-	-	-	-	-	-	**188**	**71**	**258**	**141**	**329**	**212**	399	283	470	353	551	434	**155**	**272**
ASD3D	-	-	-	-	-	-	-	-	-	-	-	-	**215**	**57**	**281**	**123**	**351**	**193**	**420**	**262**	500	342	**198**	**356**
ASD4B1	-	-	-	-	-	-	**181**	**53**	**330**	**202**	**445**	**317**	580	451	714	586	848	720	982	854	1136	1008	**207**	**335**
ASD4B2	-	-	-	-	-	-	-	-	**270**	**60**	**385**	**175**	**519**	**309**	654	443	788	578	922	712	1076	865	**267**	**478**
ASD4C	-	-	-	-	-	-	-	-	-	-	**370**	**136**	**511**	**276**	**651**	**416**	791	557	931	697	1092	857	**311**	**545**
ASD4D	-	-	-	-	-	-	-	-	-	-	-	-	**423**	**109**	**563**	**249**	**703**	**389**	**843**	**529**	1004	690	**399**	**713**
ASD5B1	-	-	-	-	-	-	**363**	**105**	**626**	**368**	**848**	**590**	1108	850	1368	1110	1628	1370	1888	1630	2185	1927	**414**	**672**
ASD5B2	-	-	-	-	-	-	-	-	**506**	**82**	**729**	**305**	**989**	**565**	1249	824	1509	1084	1769	1344	2066	1641	**533**	**958**
ASD5C	-	-	-	-	-	-	-	-	-	-	**743**	**272**	**1024**	**552**	**1304**	**833**	1585	1114	1866	1395	2187	1716	**621**	**1092**
ASD5D	-	-	-	-	-	-	-	-	-	-	-	-	**849**	**215**	**1150**	**517**	**1410**	**777**	**1691**	**1058**	2012	1379	**796**	**1429**
ASD6B1	-	-	-	-	-	-	**653**	**189**	**1126**	**662**	**1527**	**1063**	1995	1531	2463	1998	2930	2466	3398	2934	3933	3468	**745**	**1209**
ASD6B2	-	-	-	-	-	-	-	-	**911**	**147**	**1312**	**548**	**1780**	**1016**	2248	1484	2716	1952	3183	2420	3718	2954	**960**	**1724**
ASD6C	-	-	-	-	-	-	-	-	-	-	**1337**	**489**	**1843**	**994**	**2348**	**1500**	2853	2005	3359	2511	3936	3088	**1118**	**1966**
ASD6D	-	-	-	-	-	-	-	-	-	-	-	-	**1528**	**388**	**2070**	**930**	**2538**	**1399**	**3044**	**1904**	3622	2482	**1433**	**2573**

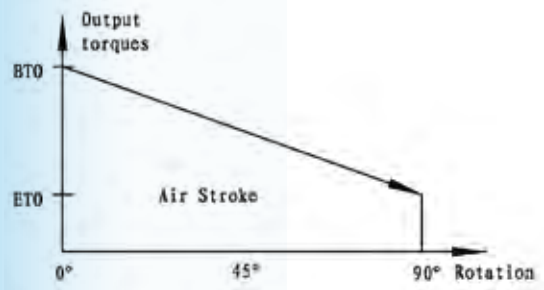

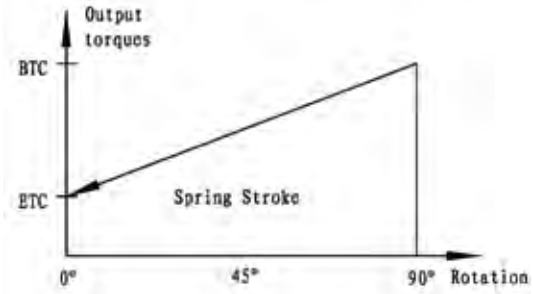

*Bold data is the output torques recommended ,and light data is the output torques for reference.

**A unique solution to provide exceptionally-smooth and reliable actuation for quarter-turn rotary valves when minimal supply pressures (0.8 - 1.3 Bar) are available.

ASD Actuator Output Torques (in.lbs)

Size	Air Strock at Pressure (psi)																						Spring Strock	
	12		15		20		30		40		50		60		70		80		90		100			
	0° BTO	90° ETO	0° BTO	90° ETO	0° BTO	90° ETO	0° BTO	90° ETO	0° BTO	90° ETO	0° BTO	90° ETO	0° BTO	90° ETO	0° BTO	90° ETO	0° BTO	90° ETO	0° BTO	90° ETO	0° BTO	90° ETO	0° ETC	90° BTC
ASD2A**	**229**	**55**	**320**	**146**	**469**	**291**	778	604	1090	924	1391	1221	1697	1527	2003	1834	2308	2140	2614	2445	2921	2755	**133**	**301**
ASD2B1	-	-	-	-	-	-	**412**	**146**	**706**	**445**	**978**	**718**	1286	1027	1584	1326	1873	1616	2197	1940	2502	2250	**460**	**717**
ASD2B2	-	-	-	-	-	-	-	-	**575**	**131**	**844**	**395**	**1152**	**706**	1451	1006	1740	1296	2064	1621	2372	1936	**593**	**1035**
ASD2C	-	-	-	-	-	-	-	-	-	-	**817**	**305**	**1125**	**616**	**1424**	**926**	1731	1225	2038	1533	2345	1848	**682**	**1186**
ASD2D	-	-	-	-	-	-	-	-	-	-	-	-	**920**	**250**	**1219**	**552**	**1527**	**861**	**1834**	**1169**	2145	1491	**885**	**1549**
ASD3A**	**421**	**201**	**604**	**385**	**901**	**685**	1529	1309	2154	1953	2765	2549	3376	3171	3996	3783	4608	4403	5227	5015	5851	5641	**310**	**513**
ASD3B1	-	-	-	-	-	-	**824**	**238**	**1430**	**872**	**1993**	**1409**	2572	2001	3160	2590	3746	3178	4332	3757	4926	4368	**912**	**1487**
ASD3B2	-	-	-	-	-	-	-	-	**1177**	**253**	**1723**	**772**	**2313**	**1367**	2902	1958	3489	2548	4067	3136	4673	3749	**1174**	**2106**
ASD3C	-	-	-	-	-	-	-	-	-	-	**1687**	**637**	**2304**	**1259**	**2928**	**1887**	3542	2512	4164	3128	4804	3784	**1372**	**2407**
ASD3D	-	-	-	-	-	-	-	-	-	-	-	-	**1920**	**509**	**2501**	**1095**	**3116**	**1713**	**3721**	**2321**	4360	2982	**1752**	**3151**
ASD4B1	-	-	-	-	-	-	**1657**	**485**	**2877**	**1761**	**3994**	**2845**	5180	4028	6355	5216	7528	6392	8700	7566	9905	8789	**1832**	**2965**
ASD4B2	-	-	-	-	-	-	-	-	**2354**	**523**	**3456**	**1571**	**4636**	**2760**	5821	3943	6996	5131	8169	6308	9382	7542	**2366**	**4230**
ASD4C	-	-	-	-	-	-	-	-	-	-	**3321**	**1221**	**4564**	**2465**	**5794**	**3703**	7022	4945	8249	6175	9521	7472	**2752**	**4823**
ASD4D	-	-	-	-	-	-	-	-	-	-	-	-	**3778**	**974**	**5011**	**2216**	**6241**	**3453**	**7469**	**4687**	8754	6016	**3532**	**6310**
ASD5B1	-	-	-	-	-	-	**3323**	**961**	**5458**	**3209**	**7611**	**5296**	9897	7592	12176	9880	14453	12163	16727	14442	19051	16802	**3664**	**5947**
ASD5B2	-	-	-	-	-	-	-	-	**4412**	**715**	**6543**	**2738**	**8834**	**5047**	11117	7334	13397	9623	15673	11908	18014	14308	**4720**	**8478**
ASD5C	-	-	-	-	-	-	-	-	-	-	**6669**	**2441**	**9146**	**4930**	**11607**	**7414**	14071	9890	16532	12359	19069	14962	**5496**	**9664**
ASD5D	-	-	-	-	-	-	-	-	-	-	-	-	**7583**	**1920**	**10236**	**4602**	**12518**	**6898**	**14982**	**9374**	17543	12024	**7045**	**12647**
ASD6B1	-	-	-	-	-	-	**5982**	**1730**	**9825**	**5776**	**13700**	**9532**	17814	13666	21917	17784	26015	21893	30109	25995	34293	30243	**6595**	**10705**
ASD6B2	-	-	-	-	-	-			**7941**	**1287**	**11778**	**4928**	**15901**	**9084**	20011	13202	24114	17322	28212	21434	32425	25755	**8496**	**15261**
ASD6C	-	-	-	-	-	-					**12004**	**4394**	**16463**	**8875**	**20892**	**13346**	25328	17802	29758	22247	34324	26932	**9893**	**17396**
ASD6D	-	-	-	-	-	-							**13650**	**3457**	**18425**	**8283**	**22532**	**12416**	**26968**	**16873**	31577	21643	**12680**	**22764**

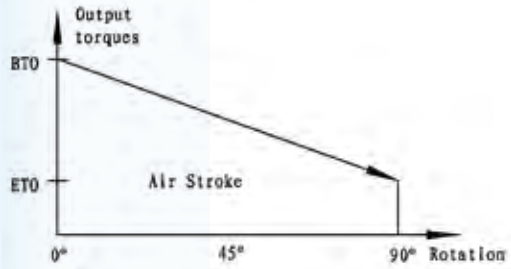

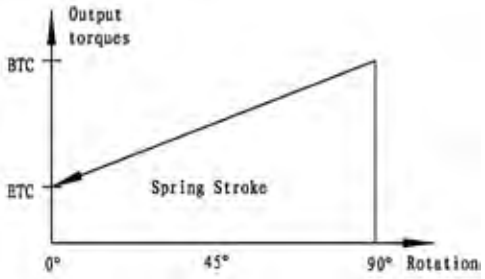

*Bold data is the output torques recommended ,and light data is the output torques for reference.

**A unique solution to provide exceptionally-smooth and reliable actuation for quarter-turn rotary valves when minimal supply pressures (12 -20 psi) are available.

Technical Specifications

Actuator Size	Air Volume Requirements		
	Total volume(L)	Swept volume(L)	Effective Diaphragm Area(cm^2)
ASD-2	1.57 (96 in^3)	1.08 (66 in^3)	155 (24 in^2)
ASD-3	3.13 (191in^3)	2.18 (133 in^3)	245 (38 in^2)
ASD-4	6.03 (368in^3)	4.34 (265 in^3)	387 (60 in^2)
ASD-5	11.72 (715in^3)	8.7 (531 in^3)	619 (96 in^2)
ASD-6	23.44 (1430in^3)	17.4 (1062in^3)	1238 (192 in^2)

Actuator Size	Operating Speed (s)*		WT (kg/lb)
	Air travel	Spring travel	
ASD-2C	1.6	1.0	21/46
ASD-3C	3.4	1.6	33/73
ASD-4C	6.0	3.3	61/134
ASD-5C	8.0	6.3	107/236
ASD-6C	8.0	6.3	177/390

* Testing operated under 4.8 Bar air pressure with 1387 L/M flow capacity for input and exhausted.

Working conditions

Maximum Operating Pressure: 7 bar (100 PSI)
Temperature Rating: -25℃ to 70℃ (-13°F to 158°F)
Optional Temperature Rating: -40℃ to 70℃ (-40°F to 158°F)
Optional Temperature Rating: -29℃ to 170℃ (-20.2°F to 338°F)
Optional Temperature Rating: -15℃ to 200℃ (5°F to 392°F)
Rotation Adjustment: ＜±5° adjustment at open or closed positions.
Supply Media: Air, water, mineral-based hydraulic fluid.

* Larger solenoid pilot valves may be used to increase operating speeds. Actual times may vary with different applications. Please consult the factory for more specific details based on application requirements.

Dimension

ASD2, ASD4, ADS3, ASD5 dimensions

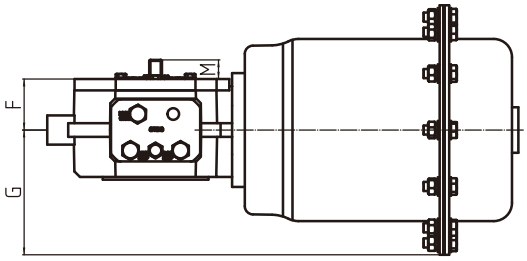

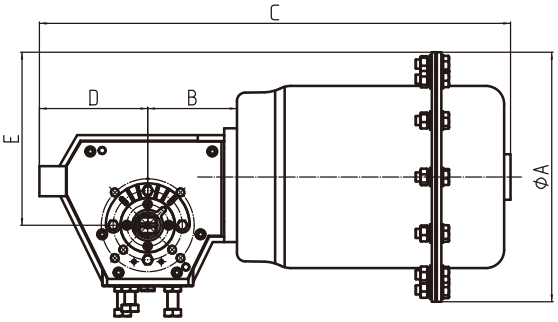

ASD6 dimensions

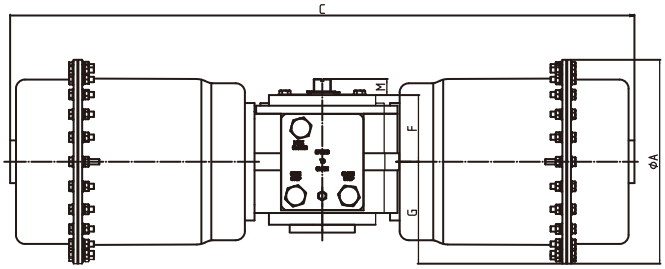

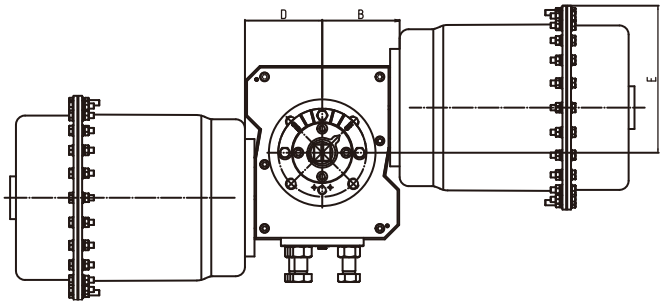

Actuator Size	Approximate dimensions (mm)							
	ØA	B	C	D	E	F	G	M
ASD-2	227	75	440	91	156	52	114	20
ASD-3	274	98	520	119	190	56	137	20
ASD-4	320	108	592	140	228	75	160	20
ASD-5	382	130	721	160	276	90	191	20
ASD-6	382	145	1170	145	276	125	191	30

Actuator Size	Approximate dimensions (in)							
	ØA	B	C	D	E	F	G	M
ASD-2	8.94	2.95	17.32	3.58	6.14	2.05	4.49	0.8
ASD-3	10.79	3.85	20.47	4.69	7.48	2.20	5.39	0.8
ASD-4	12.60	4.25	23.31	5.51	8.98	2.95	6.30	0.8
ASD-5	15.04	5.12	28.39	6.30	10.87	3.54	7.52	0.8
ASD-6	15.04	5.71	46.06	5.71	10.87	4.90	7.52	1.18

Air port and Namur connection

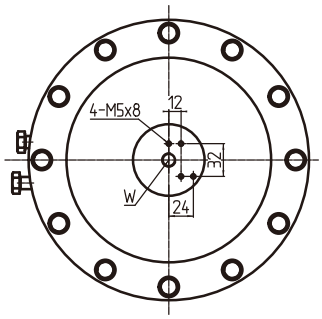

Actuator	Air Port (W)
ASD2	3/8 " or 1/4" FNPT NAMUR and 1/2" FNPT on request"
ASD3	3/8 " or 1/4" FNPT NAMUR and 1/2" FNPT on request"
ASD4	3/8 " or 1/4" FNPT NAMUR and 1/2" FNPT on request"
ASD5	3/8 " or 1/4" FNPT NAMUR and 1/2" FNPT on request"
ASD6	3/8 " or 1/4" FNPT NAMUR and 1/2" FNPT on request"

Mounting Dimensions

The ALPHA ASD Spring-Diaphragm Rotary Actuator mounting dimensions are made to ISO 5211 standards and all our actuators come with Namur mounting pads as a standard.

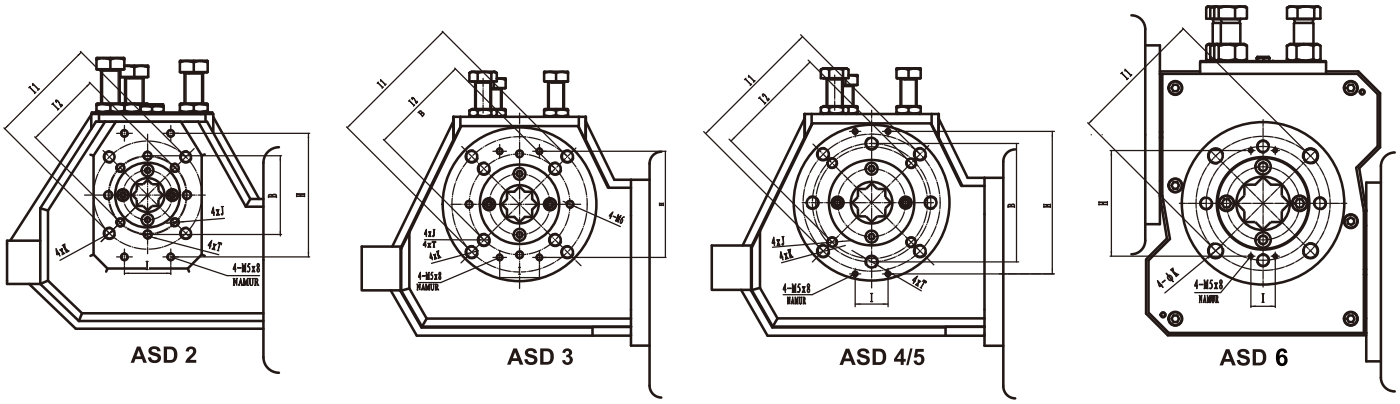

Unit: in (mm)

Actuator Size	ISO 5211 Mount				Jb* Mount		Namur (VDI/VDE 3845)	
	ØI1	K	ØI2	J	ØB	T	H	I
ASD2	2.76 (F07)	M8X13	1.97 (F05)	M6X10	2.00 (51)	1/4-20unc-2B	3.15 (80)	1.18 (30)
ASD3	4.02 (F10)	M10X16	2.76 (F07)	M8X13	3.00 (76)	3/8-16unc-2B	3.15 (80)	1.18 (30)
ASD4	4.92 (F12)	M12X20	4.02 (F10)	M10X16	4.25 (108)	1/2-13unc-2B	5.12 (130)	1.18 (30)
ASD5	5.51 (F14)	M16X25	4.02 (F10)	M10X16	4.25 (108)	1/2-13unc-2B	5.12 (130)	1.18 (30)
ASD6	6.50 (F16)	M20X25	-	-	-	-	5.12 (130)	1.18 (30)

*Jamesbury flange mount dimenstions.

Actuator Size	Flange Mount Configuation	
	ISO 5211 Mount (MI)	ISO + Jb Mount (MJ)
ASD2	F05 + F07	F05 + JB51 + F07
ASD3	F07 + F10	JB76 + F10
ASD4	F10 + F12	F10 + JB108 + F12
ASD5	F10 + F14	F10 + JB108 + F14
ASD6	F16	-

Bushing Dimensions *

Drive bushings are available in keyed, double D, female double square, male square, star and namur mount.

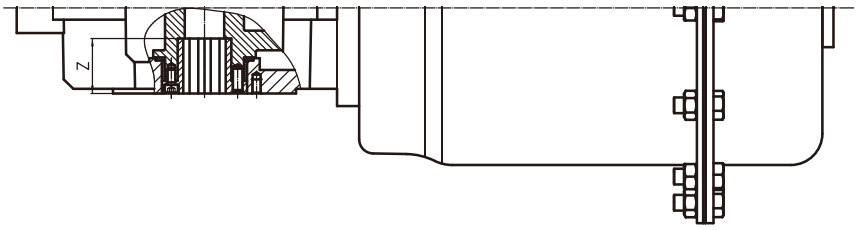

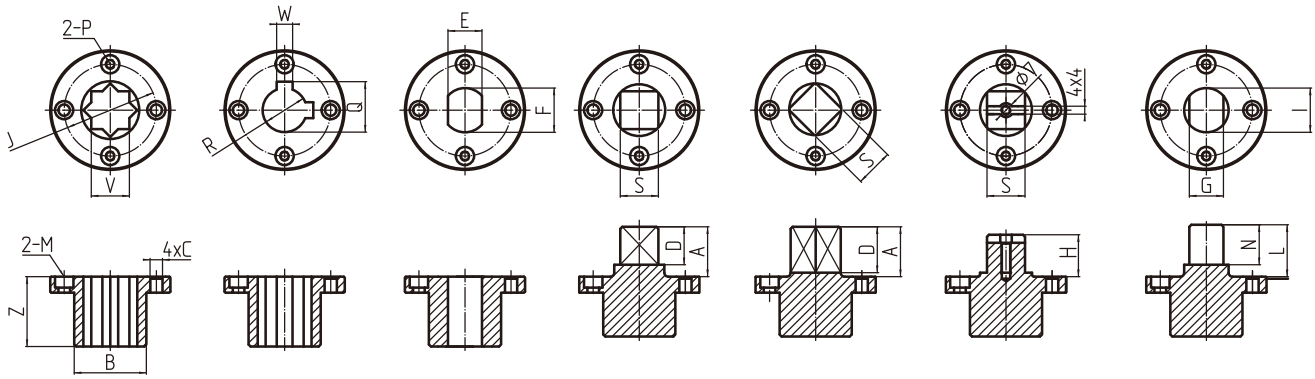

FS - Double Square | FK - Keyed | FD - Double D | MQ - Square | MT - Star | MN - Namur Stem | MD - Double D

Unit: in (mm)

Actuator Size	Female drive						Male drive								Bush Connections				
	Double square (FS)	Keys (FK)			Double D (FD)		Square (Star) (MQ / MT / MN)				Double D (MD)								
	V	R	Q	W	E	ØF	S	A	D	H	G	ØI	N	L	ØB	K	Z	M / P	ØC
ASD2	0.55 (14)	0.55 (14)	0.64 (16.3)	0.20 (5)	0.55(14)	0.71(18.1)	0.55(14)	0.63(16)	0.55(14)	0.79(20)	0.55 (14)	0.71(18.1)	0.87 (22)	0.98 (25)	0.98(25)	0.24(6)	1.18 (30)	M4x8	0.16 (4)
ASD3	0.87(22)	0.87 (22)	0.98 (24.8)	0.24 (6)	0.67(17)	0.87(22.2)	0.75(19)	0.98(25)	0.75(19)	0.79(20)	0.67 (17)	0.87(22.2)	1.06 (27)	1.18 (30)	1.42(36)	0.31(8)	1.38 (35)	M5x10	0.24 (6)
ASD4	1.06(27)	1.42 (36)	1.55 (39.3)	0.39 (10)	0.87(22)	1.11(28.2)	0.98(25)	0.98(25)	0.87(22)	0.79(20)	0.87 (22)	1.11(28.2)	1.42 (36)	1.54 (39)	1.97(50)	0.39(10)	1.77 (45)	M6x12	0.31 (8)
ASD5	1.42(36)	1.57 (40)	1.77 (45)	0.38(9.6)	1.06(27)	1.43(36.2)	0.98(25)	0.98(25)	0.87(22)	0.79(20)	1.06 (27)	1.43(36.2)	1.77 (45)	1.89 (48)	2.20(56)	0.47(12)	2.17 (55)	M8x14	0.39 (10)
ASD6	1.81(46)	1.97 (50)	2.12(53.8)	0.55(14)	11.81(46)	2.37(60.2)	11.81(46)	1.89(48)	1.77(45)	1.18(30)	11.81(46)	2.36(60)	1.77(45)	1.89(48)	2.83(72)	0.59(15)	2.36 (60)	M12x16	0.49 (12)

* It is available to customize the drive type .

Fail-close to Fail-open

As for ASD series actuator, Fail-close or fail-open operation can be quickly changed in the field by simply inverting bushes and the actuator.

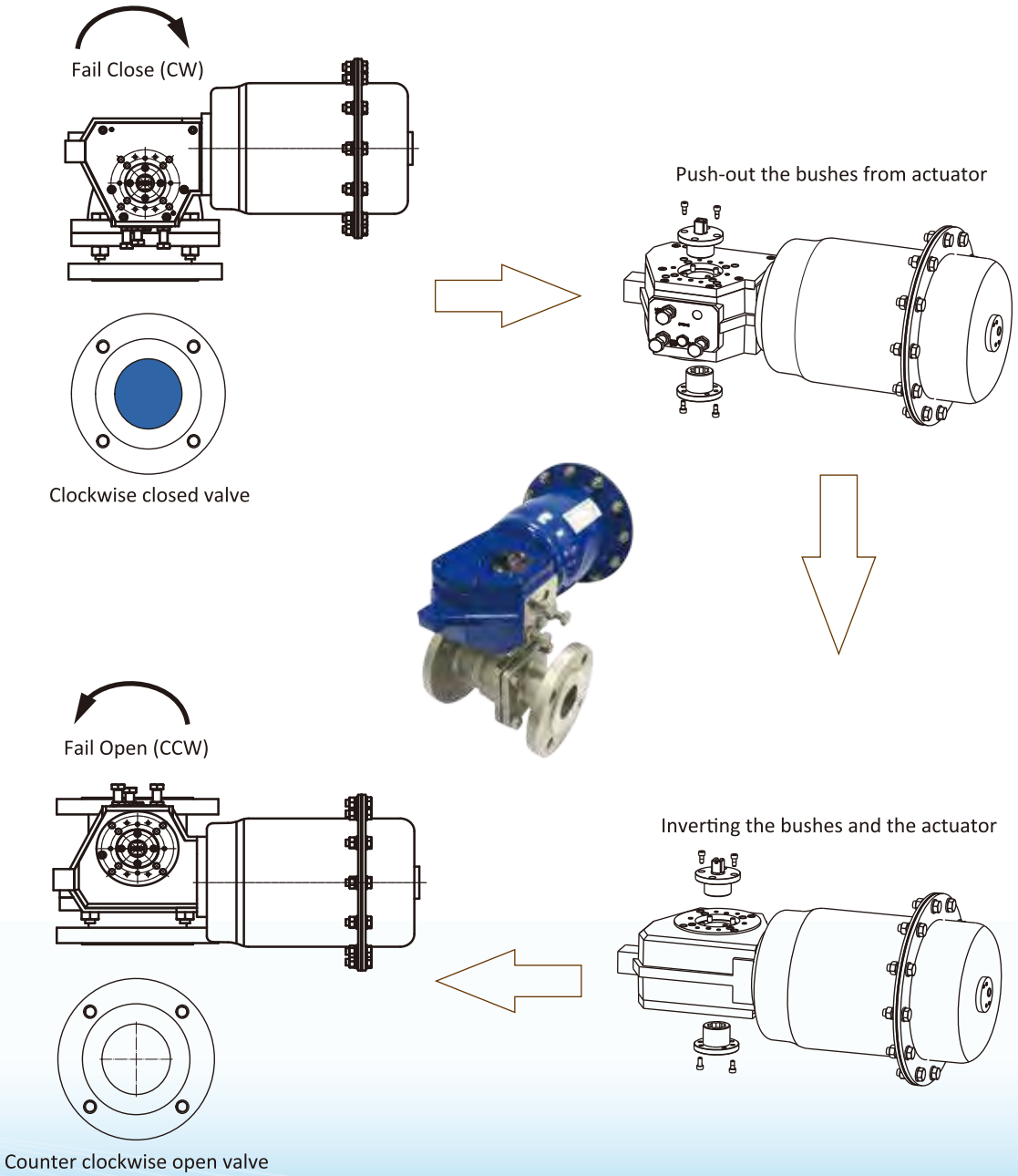

Manual Override

A manual override is available for all models of our ASD series actuators and all of our manual overrides can be used with any of our drive bushings.

ALPHA has the ability to customize our manual overrides to work in various directions and can be mounted in different ways. Please consult our factory for more information about our overrides and mounting capabilities.

Override Guide

NO.	Actuator	Manual Overrider	Gear Ratio	Input Torque(Nm)	Output Torque(Nm)	Weight(Kg)
1	ASD-2	ALXL26-1	26:1	70 (7.9 in.lbs)	300 (33.9 in.lbs)	4 (8.8 lb)
2	ASD-3	ALXL38-1	38:1	60 (6.8 in.lbs)	550 (62.2 in.lbs)	5.5 (12.1 lb)
3	ASD-4	ALXL38-2	38:1	60 (6.8 in.lbs)	550 (62.2 in.lbs)	5.5 (12.1 lb)
4	ASD-5	ALXL54-1	54:1	120 (13.6 in.lbs)	1200 (135.6 in.lbs)	9 (19.8 lb)
5	ASD-6	ALXL98-1	98:1	300 (33.9 in.lbs)	9000 (1020 in.lbs)	135 (297 lb)

ALXL series Manual Override Approximate Dimensions

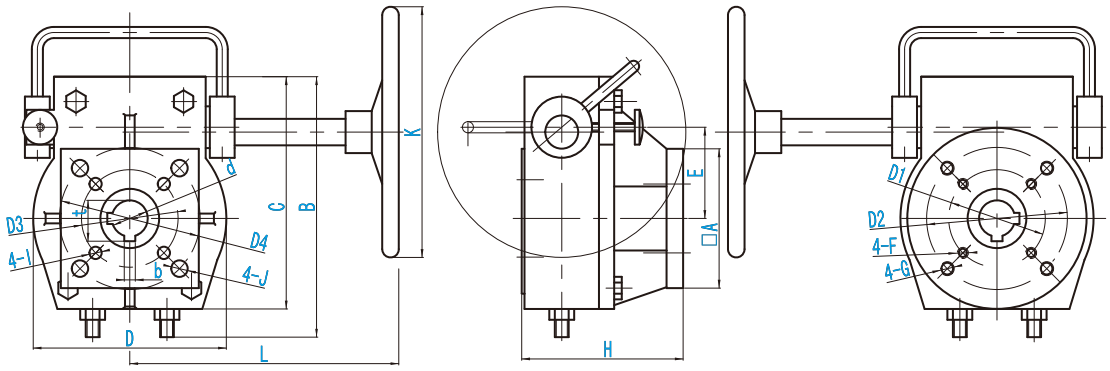

Unit:mm

Model	d	b	t	D1	F	D2	G	A	H	E	D3	I	D4	J	K	L	B	C	D
ALXL26-1	22	6	25.4			70	M8	70	99	50.5			70	Φ9	Φ180	155	160	145	105
ALXL38-1	26	8	29.3	70	M8			100	117	65.5	70	Φ9			Φ200	195	187	167	140
ALXL38-2	38	10	41.3			102	M10	110					102	Φ12					
ALXL54-1	38	10	41.3	125	M12			130	118	85.5	125	Φ14			Φ280	205	232	212	175
ALXL98-1	80	22	85.4	165	M20			230	195	229	165	Φ22			Φ800	410	550	530	460

Unit:in

Model	d	b	t	D1	F	D2	G	A	H	E	D3	I	D4	J	K	L	B	C	D
ALXL26-1	0.87	0.24	1.00			2.76	M8	2.76	3.90	1.99			2.76	Φ0.35	Φ7.09	6.10	6.30	5.71	4.13
ALXL38-1	1.02	0.31	1.15	2.76	M8			3.94	4.61	2.58	2.76	Φ0.35			Φ7.87	7.68	7.36	6.57	5.51
ALXL38-2	1.50	0.39	1.63			4.02	M10	4.33					4.02	Φ0.47					
ALXL54-1	1.50	0.39	1.63	4.92	M12			5.12	4.65	3.77	4.92	Φ0.55			Φ11.02	8.07	9.13	8.35	6.89
ALXL98-1	3.15	0.866	3.362	6.496	M20			9.055	7.677	9.016	6.496	Φ0.87			Φ31.50	16.14	21.65	20.87	18.11

ALPHA CONTROLS®

ALPHA CONTROLS LTD

Alpha Controls Ltd Alpha House,
Hindley Industrial Estate, Swan Lane,
Hindley Green. Wigan. WN2 4HR. UK

Telephone +44 (0)1942 525833
www.alphacontrols.co.uk | E-mail: technicalsales@alphacontrols.co.uk