ALPHA CONTROLS LTD

ALV SERIES

Model No: **ALV212F1C5**

Stainless Steel Direct Acting Solenoid Valve

Based on FLAMEPROOF standard, the **DIRECT ACTING SOLENOID VALVE** is spring return and normally closed and available for the operation of single acting pneumatic devices located in corrosive and hazardous (Ex dIIC T6) area. Working pressure from 0 to 8 bar and the working voltage 12-48VDC, 110-240VAC.This solenoid valve mounting special for vertical NAMUR interface.

sira CERTIFICATION **QA Notification No: SIRA 12 ATEX M526**
Notified Body No: 0518 for Annexes IV and VII

DNV **EC-Type Examination Certificate Number: DNV 12 ATEX 13733X**
Notified Body No: 0575

APPROVED BY: CE Ex

SPECIFICATIONS AND TECHNICAL DATA

SPOOL BODY

- **Body:** Stainless steel 316
- **Seal:** Buna N
- **Fasteners:** Stainless steel
- **Function:** 3/2 direct acting, spring return, NC, Monostable
- **Orifice:** 1.3mm
- **Flow rate:** 74l/min at 5bar with 1bar pressure drop
- **Manual Override:** on the body
- **Air Ports:** Air ports 1/8" or 1/4" BSPP or NPT
- **Mounting:** Namur or Remote mounted
- **Medium Temperature:** -25°c~80°c
- **Working Pressure:** 0~8 bar
- **Working Medium:** less than 40µm filtered and dried air
- **Area Classification:** Ex d IIC T6
- **Working life:** more than 1000,000 cycle (On normal condition)

SOLENOID COIL

- **Coil Enclosure:** Dir-casting aluminum + Epoxy coated
- **Wiring Connector:** M20-1.5, 1/2" NPT on request Terminal Strip
- **Operating Voltage:** 12/24/48VDC-3.5W, 24VDC-1.5W 110/210/220/240VAC-4VA (50/60HZ)
- **Insulation Protection:** F Class Coil
- **Insulated voltage:** 1000V
- **Duty factor:** 100% ED
- **Area Classification:** Ex d IIC T6
- **Weather Proof:** IP66
- **Operating Temp:** -20°c~60°c

HIGH QUALITY | EXCELLENT PRICE | WHERE QUALITY COUNTS

Alpha Controls Ltd Alpha House, 1 Ormside Close, Hindley Industrial Estate, Hindley Green, Wigan. WN2 4HR. | Tel: +44 (0)1942 525833 | E-mail: technicalsales@alphacontrols.co.uk
www.alphacontrols.co.uk | www.alphacontrolssystems.com

ALPHA CONTROLS LTD

ALV SERIES

Model No: **ALV212F1C5**

MAIN FEATURE

1, Manual override on the body; 2, Individual or direct relay mounting; 3,Interchangeable coils for various hazardous area options; 4, Stainless steel exhaust dust caps fitted as standard.

WIRING DIAGRAM AND OPERATING

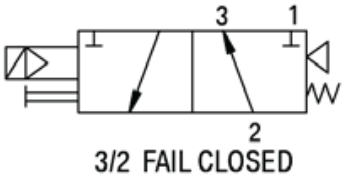

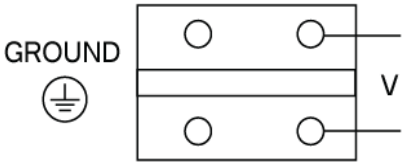

DRAWING & DIMENSION

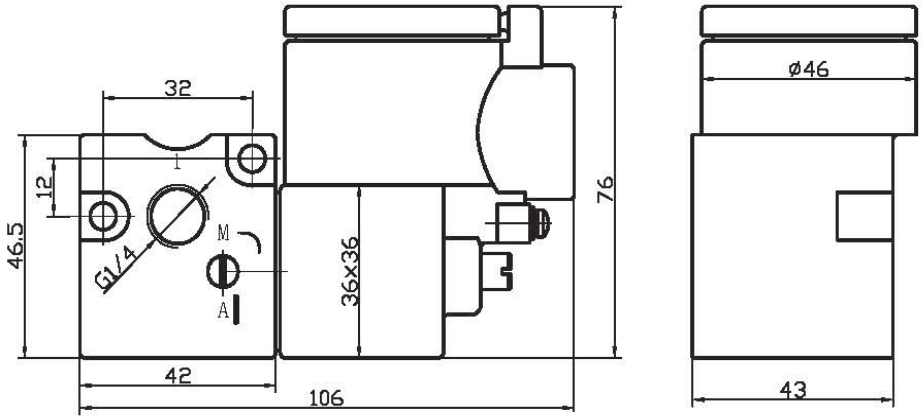

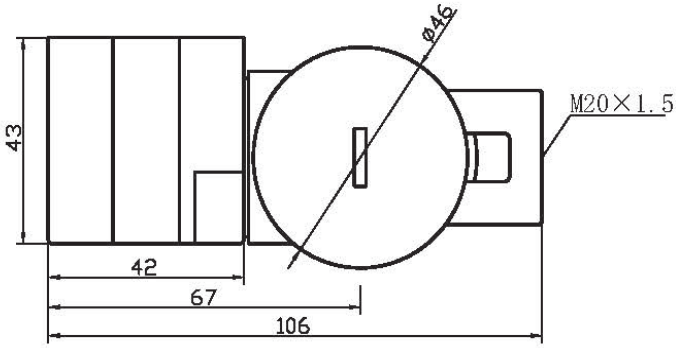

***For continuous improvement of the product, we reserve the right to alter the dimensions, technical data and information included in this data sheet.

HIGH QUALITY | EXCELLENT PRICE | WHERE QUALITY COUNTS

Alpha Controls Ltd Alpha House, 1 Ormside Close, Hindley Industrial Estate, Hindley Green, Wigan. WN2 4HR. | Tel: +44 (0)1942 525833 | E-mail: technicalsales@alphacontrols.co.uk
www.alphacontrols.co.uk | www.alphacontrolssystems.com