Fig.:
221-T-D

2-PC Ball Valve,with ISO5211 Direct Mounting Pad
PN63, Full Bore, F/F

FEATURES:

- CE marking
- Blow-out Proof Stem
- Adjustable Packing Gland
- **Anti-Static** Devices For Ball-Stem-Body
- Various Thread and Available
- Various Seal Material Available
- *Fire Safe* Design And Construction upon request
- Materials : ASTM A351 CF8M, CF8, A216 WCB.
  DIN 1.4408, 1.4301

STANDARD:

- Design: ASME B16.34
- Wall Thickness: ASME B16.34,GB12224
- Pipe Thread: BS21/2779,DIN 259/2999,ISO 228-1,AS1722.1/1722.2
- Inspection & Testing: API 598

No.	Parts name	Material
1	Bonnet	1.4408
2	Seat	PTFE+15%/R-PTFE
3	Ball	DIN1.4401
4	Gasket	PTFE
5	Stem Gasket	PTFE
6	O-Ring	Viton
7	Main Body	1.4408
8	Packing	PTFE
9	Packing Gland	1.4301
10	Spring Washer	SS304
11	Stem Nut	1.4301
12	Thrust Washer	1.4301
13	Packing Gland	1.4301
14	Handle	1.4301
15	Nut	1.4301
16	Stop Pin	1.4301
17	Handle Sleeve	Plastic
18	Stem	1.4401
19	Anti-Static Device	1.4301

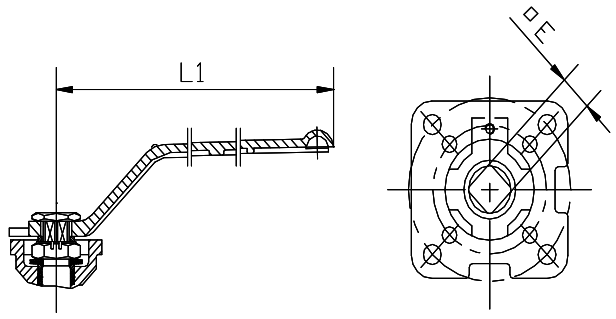

DN65 ~ DN80 ISO 5211

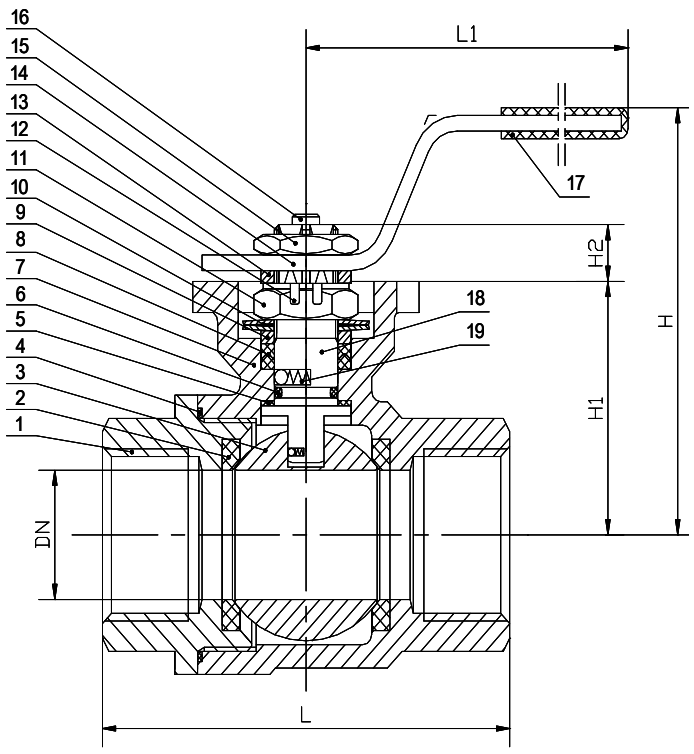

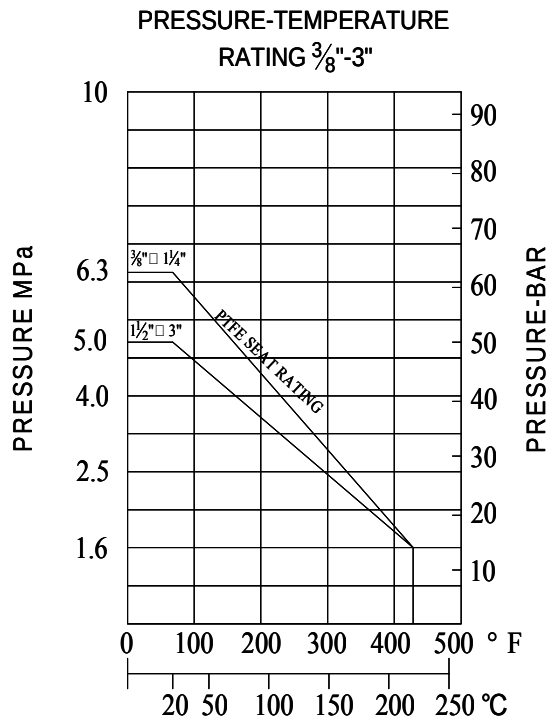

Dimension Unit: mm

SIZE	DN(mm)	L	L1	□E	H	H1	H2	ISO5211	Break Torque NM
1/4"	8	50	120	9	63	32	8	F03	4
3/8"	10	60	120	9	63	32	8	F03/F04	4
1/2"	15	76	120	9	70	40	8.5	F03/F04	4
3/4"	20	80	137	11	78	45	11	F04/F05	5
1"	25	90	137	11	82	49	11	F04/F05	8
1-1/4"	32	110	187	11	88	55	11	F04/F05	10
1-1/2"	40	120	187	11	93	60	11	F04/F05	17
2"	50	140	187	14	103	73	15	F05/F07	24
2-1/2"	65	185	315	17	165	93	18.5	F07/F10	31.5
3"	80	205	315	17	180	106	18.5	F07/F10	56

ALPHA CONTROLS LTD
Phone: 01942 525 833, Fax: 01942 523 413
www.alphacontrols.co.uk
technicalsales@alphacontrols.co.uk